DRC

PZ24-12000024

05/07/2025

Irrigation Notes

LAYOUT

LAYOUT IRRIGATION SYSTEM MAINLINES AND LATERAL LINES. MAKE ALL NECESSARY ADJUSTMENTS AS REQUIRED TO TAKE INTO ACCOUNT ALL SITE OBSTRUCTIONS AND LIMITATIONS PRIOR TO EXCAVATING TRENCHES.

FLAG ALL SPRINKLER HEAD LOCATIONS. ADJUST LOCATION AND MAKE THE NECESSARY MODIFICATIONS TO NOZZLE TYPES ETC. AS REQUIRED TO ENSURE 100% COVERAGE AND 50% OVERLAP.

LOW ANGLE TRAJECTORY NOZZLES SHALL BE USED WHEN ALL SPRINKLERS AND ROTORS ARE LOCATED WITHIN 100' OF POOLS OR PUBLIC GATHERING AREAS.

PIPE

PIPE LOCATIONS SHOWN ON PLAN ARE SCHEMATIC ONLY AND SHALL BE ADJUSTED IN THE FIELD. WHEN LAYING-OUT MAINS AND LATERALS, LOCATE PIPE NEAR EDGES OF PAVEMENT OR AGAINST BUILDINGS WHEREVER POSSIBLE TO ALLOW SPACE FOR PLANT ROOT BALLS.

PIPING UNDER HARDSCAPES SUCH AS ROADS, WALKS, AND PATIOS ARE TO BE SLEEVED USING SCH. 40 PIPE.

PIPES 4" AND UNDER TO BE SOLVENT WELD. LARGER PIPES TO BE GASKETED 'O' RING PIPES AND USE THRUST BLOCKS OR MEGA LUGS AND DUCTILE IRON FITTINGS AT TURNING LOCATIONS.

***SIZE ALL PIPE SO NOT TO EXCEED 5' PER SECOND**
***INSTALL RAIN SENSOR AS PER LOCAL CODE**

PIPES CONVEYING RECLAIM WATER SHALL HAVE A 3' HORIZONTAL DISTANCE SEPARATION FROM OTHER PIPING OR UTILITY SERVICES. AN 18" VERTICAL SEPARATION SHALL BE MAINTAINED WHEN APPLICABLE.

AIR RELEASE VALVES TO BE USED AT THE END OF ALL MAINLINE RUNS.

ALL PIPES TO BE IN ACCORDANCE WITH APPENDIX F OF THE LATEST EDITION OF THE FLORIDA BUILDING CODE.

WIRES

MAXI-WIRE (14 GAUGE) TO BE INSTALLED ALONG MAINLINE INSTALLATION. USE 2" SCH. 40 PVC WITH SWEEP ELBOWS AT TURNING LOCATIONS WHEN SLEEVING IS REQUIRED. ALL SPLICES AND DECODERS SHALL BE ENCLOSED WITHIN A VALVE/SPLICE BOX. 3M DIRECT BURY DBY-6 WATERPROOF CONNECTIONS SHALL BE USED AT ALL DECODER CONNECTIONS (ENCAPSULATION).

WIRE RUNS SHALL NOT EXCEED 2.4 MILES (STAR) OR 9.6 MILES (LOOP).

A SINGLE FIELD DECODER SHOULD BE USED TO OPERATE A SINGLE SOLENOID/VALVE.

ALL IRRIGATION CONTROLLERS/DECODERS TO BE PROPERLY INSTALLED AND GROUNDED IN ACCORDANCE WITH MANUFACTURE'S RECOMMENDATIONS. INSTALL SURGE PROTECTION ALONG 2 WIRE-SYSTEM PER MANUFACTURER'S RECOMMENDATION. (APPROXIMATELY EVERY 500 FEET)

FLUSHING

PRIOR TO PLACEMENT OF HEADS FLUSH ALL LINES UNTIL LINES ARE COMPLETELY CLEAN OF DEBRIS.

TRENCHING

TRENCH BOTTOM TO BE UNIFORM AND FREE OF DEBRIS. NATIVE EXCAVATED MATERIAL USED TO BACKFILL TRENCH SHALL BE FREE FROM ROCKS OR STONES LARGER THAN 1" IN DIAMETER.

MISC.

PRESSURE TEST MAINLINE AS PER FLORIDA BUILDING CODE. INSTALL IRRIGATION SYSTEM AS PER LATEST EDITION OF THE FLORIDA BUILDING CODE, APPENDIX F., AND ALL PERTINENT LOCAL CODES.

SPRAY HEADS INSTALLED IN SHRUB AREAS TO BE 12 INCH POP-UPS OR INSTALLED ON RISERS.

DESIGN

THIS DESIGN IS DIAGRAMMATIC. ALL IRRIGATION EQUIPMENT SUCH AS PIPES, VALVES, , ETC., SHOWN WITHIN PERVIOUS AREAS ARE FOR DESIGN CLARIFICATION ONLY. THE IRRIGATION CONTRACTOR SHALL INSTALL IRRIGATION EQUIPMENT IN PLANTING AREAS WHEREVER POSSIBLE.

THE IRRIGATION CONTRACTOR IS RESPONSIBLE TO FAMILIARIZE THEMSELVES WITH THE SCOPE OF WORK, INCLUDING BUT NOT LIMITED TO GRADE DIFFERENCES, LOCATION OF WALLS, STRUCTURES, UTILITIES AND EXISTING IRRIGATION EQUIPMENT. THE IRRIGATION CONTRACTOR IS RESPONSIBLE SHALL REPAIR AND/OR REPLACE ANY DAMAGE CREATED BY THEIR WORK. THEY SHALL COORDINATE HIS WORK WITH OTHER CONTRACTOR OR MUNICIPAL AUTHORITIES FOR THE LOCATION AND INSTALLATION OF IRRIGATION EQUIPMENT UNDER ROADWAYS AND PAVING, SLEEVES THROUGH WALLS AND FLOORS, ETC.

INSTALL ALL IRRIGATION EQUIPMENT PER MANUFACTURER'S RECOMMENDATIONS AND SPECIFICATIONS. SUBSTITUTIONS FOR IRRIGATION EQUIPMENT TO BE APPROVED BY THE IRRIGATION DESIGNER. EQUIPMENT CHANGES TO INCLUDE BUT NOT LIMITED TO PUMP, CONTROLLER, SPRAY HEADS, ROTORS, AND VALVES.

DO NOT INSTALL IRRIGATION EQUIPMENT AS SHOWN ON THE DRAWINGS WHEN FIELD CONDITIONS DIFFER. OBSTRUCTIONS OR DIFFERENCES SHALL BE BROUGHT TO THE ATTENTION OF THE OWNER OR OWNER'S REPRESENTATIVE. IN THE EVENT THIS NOTIFICATION IS NOT PERFORMED, THE IRRIGATION CONTRACTOR SHALL ASSUME FULL RESPONSIBILITY.

ELECTRIC

POWER TO BE PROVIDED TO THE CONTROLLER BY ELECTRICIAN.

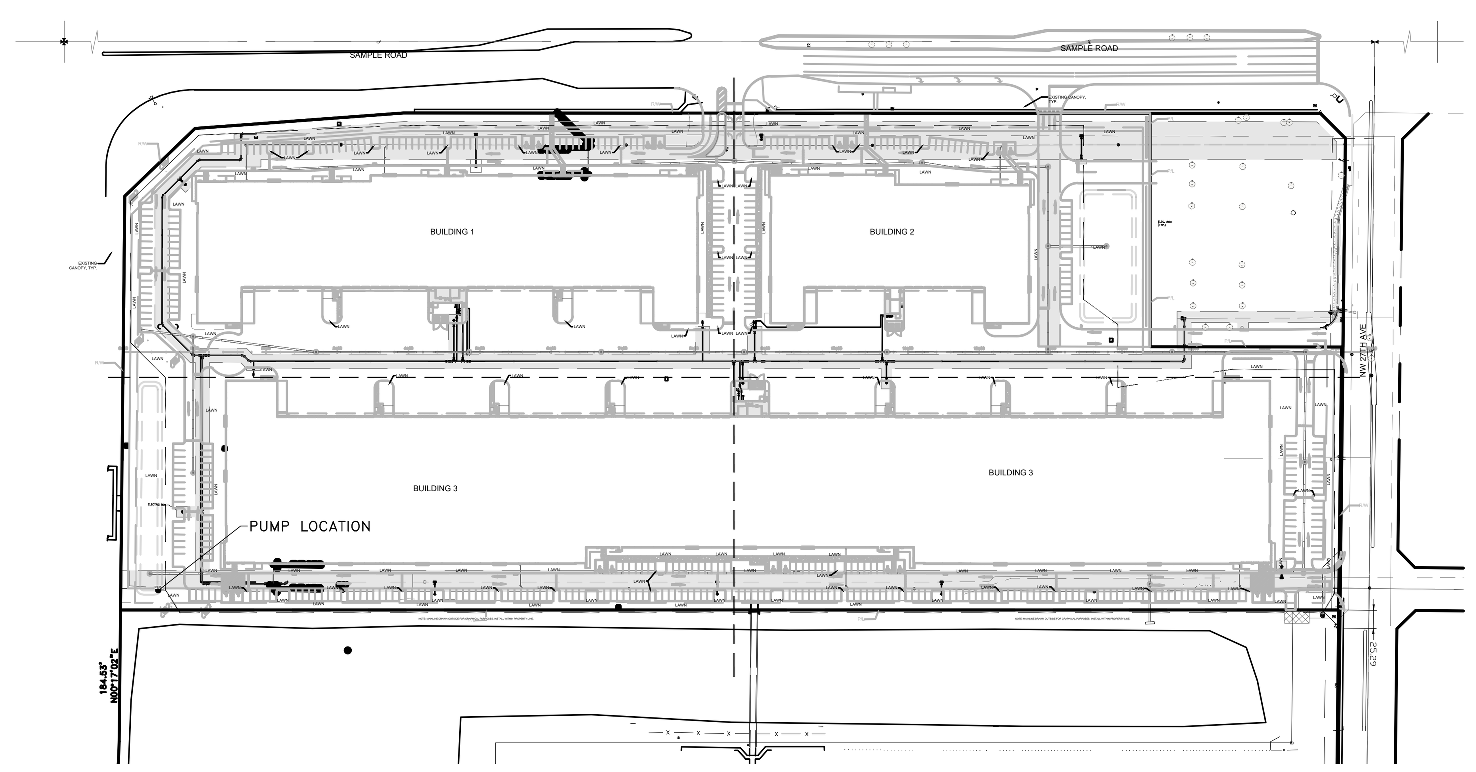

IRRIGATION SCHEDULE

SYMBOL	MANUFACTURER/MODEL/DESCRIPTION	QTY	PSI		
EST LCS RCS CST SST	Rain Bird 1806 15 Strip Series Turf Spray 6.0in. Pop-Up Sprinkler with Co-Molded Wiper Seal. Side and Bottom Inlet. 1/2in. NPT Female Threaded Inlet.	88	30		
8 Q T H F	Rain Bird 1806 8 Series MPR Turf Spray 6.0in. Pop-Up Sprinkler with Co-Molded Wiper Seal. Side and Bottom Inlet. 1/2in. NPT Female Threaded Inlet.	134	30		
10 Q T H F	Rain Bird 1806 10 Series MPR Turf Spray 6.0in. Pop-Up Sprinkler with Co-Molded Wiper Seal. Side and Bottom Inlet. 1/2in. NPT Female Threaded Inlet.	59	30		
12 Q T H TQ F	Rain Bird 1806 12 Series MPR Turf Spray 6.0in. Pop-Up Sprinkler with Co-Molded Wiper Seal. Side and Bottom Inlet. 1/2in. NPT Female Threaded Inlet.	838	30		
15 Q T H TQ F	Rain Bird 1806 15 Series MPR Turf Spray 6.0in. Pop-Up Sprinkler with Co-Molded Wiper Seal. Side and Bottom Inlet. 1/2in. NPT Female Threaded Inlet.	383	30		
SYMBOL	MANUFACTURER/MODEL/DESCRIPTION	QTY	PSI	GPM	RADIUS
0.75	Rain Bird 3504-PC 0.75 Turf Rotor, 4in. Pop-Up. Adjustable and Full Circle.	12	55	0.85	18'
1.0	Rain Bird 3504-PC 1.0 Turf Rotor, 4in. Pop-Up. Adjustable and Full Circle.	20	55	1.18	22'
1.5	Rain Bird 3504-PC 1.5 Turf Rotor, 4in. Pop-Up. Adjustable and Full Circle.	5	55	1.65	24'
2.0	Rain Bird 3504-PC 2.0 Turf Rotor, 4in. Pop-Up. Adjustable and Full Circle.	32	55	2.15	28'
3.0	Rain Bird 3504-PC 3.0 Turf Rotor, 4in. Pop-Up. Adjustable and Full Circle.	9	55	3.25	32'
4.0	Rain Bird 3504-PC 4.0 Turf Rotor, 4in. Pop-Up. Adjustable and Full Circle.	7	55	4.6	35'
1.5	Rain Bird 5006-PC 1.5 Turf Rotor, 6in. Pop-Up, Plastic Riser. Adjustable to Full Circle. Standard Angle Nozzle.	18	55	1.71	35'
2.0	Rain Bird 5006-PC 2.0 Turf Rotor, 6in. Pop-Up, Plastic Riser. Adjustable to Full Circle. Standard Angle Nozzle.	9	55	2.3	37'
3.0	Rain Bird 5006-PC 3.0 Turf Rotor, 6in. Pop-Up, Plastic Riser. Adjustable to Full Circle. Standard Angle Nozzle.	2	55	3.47	40'
4.0	Rain Bird 5006-PC 4.0 Turf Rotor, 6in. Pop-Up, Plastic Riser. Adjustable to Full Circle. Standard Angle Nozzle.	18	55	4.44	42'
5.0	Rain Bird 5006-PC 5.0 Turf Rotor, 6in. Pop-Up, Plastic Riser. Adjustable to Full Circle. Standard Angle Nozzle.	1	55	5.66	45'
6.0	Rain Bird 5006-PC 6.0 Turf Rotor, 6in. Pop-Up, Plastic Riser. Adjustable to Full Circle. Standard Angle Nozzle.	1	55	6.63	50'
8.0	Rain Bird 5006-PC 8.0 Turf Rotor, 6in. Pop-Up, Plastic Riser. Adjustable to Full Circle. Standard Angle Nozzle.	6	55	8.86	47'
SYMBOL	MANUFACTURER/MODEL/DESCRIPTION	QTY			
P&W	Point of Connection 3" 7.5 HP Centrifugal Pump with Rust Inhibitor & 3" Well	1			
— — — —	Irrigation Mainline: PVC Schedule 40	4,632 lf			
- - - - - -	Pipe Sleeve: PVC Schedule 40	381.8 lf			
- - - - - -	Pipe Sleeve: PVC Schedule 40 2"	403.6 lf			

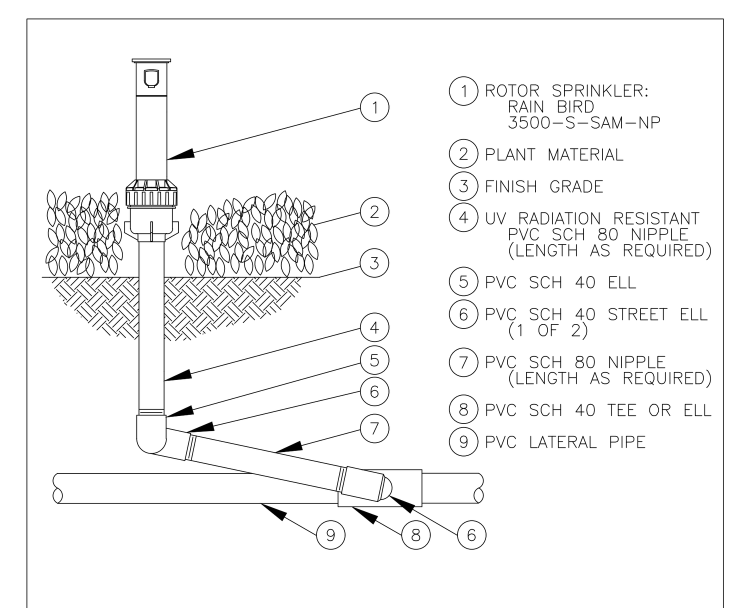

RAIN BIRD 3500 SERIES ROTOR

Valve Callout

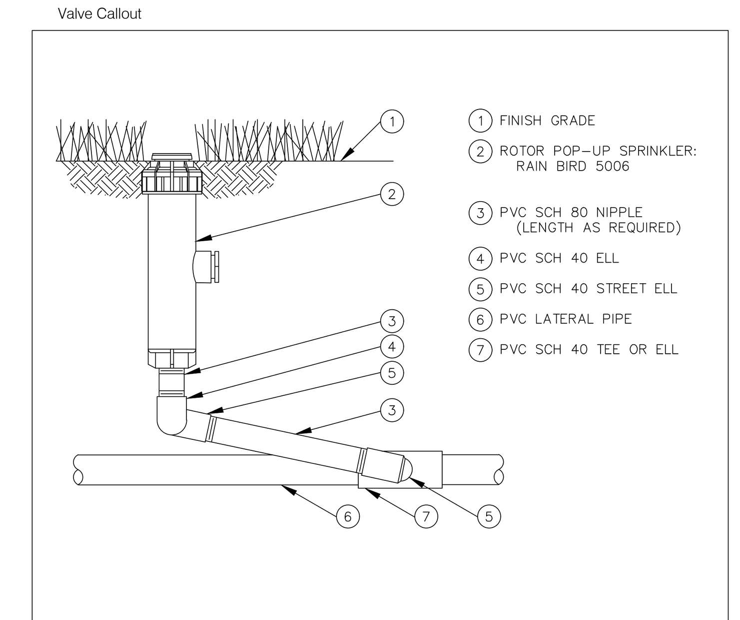

RAIN BIRD 5000 SERIES ROTOR

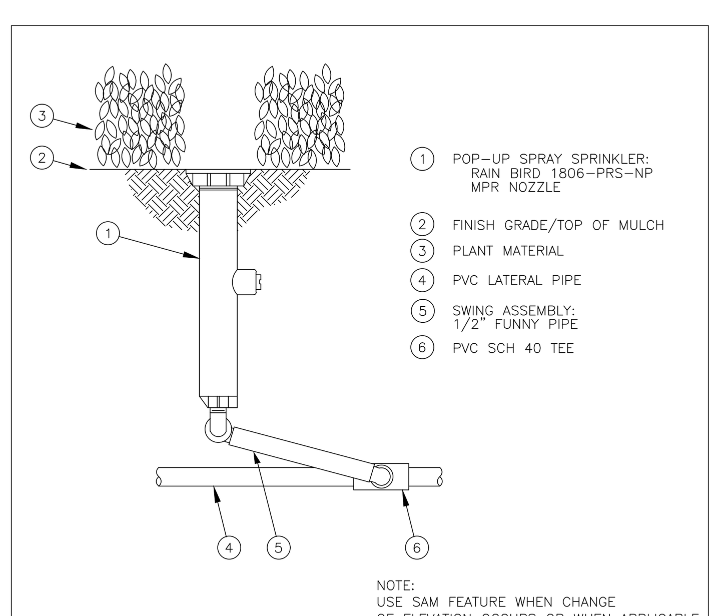

RAIN BIRD 1800 SERIES SPRINKLER

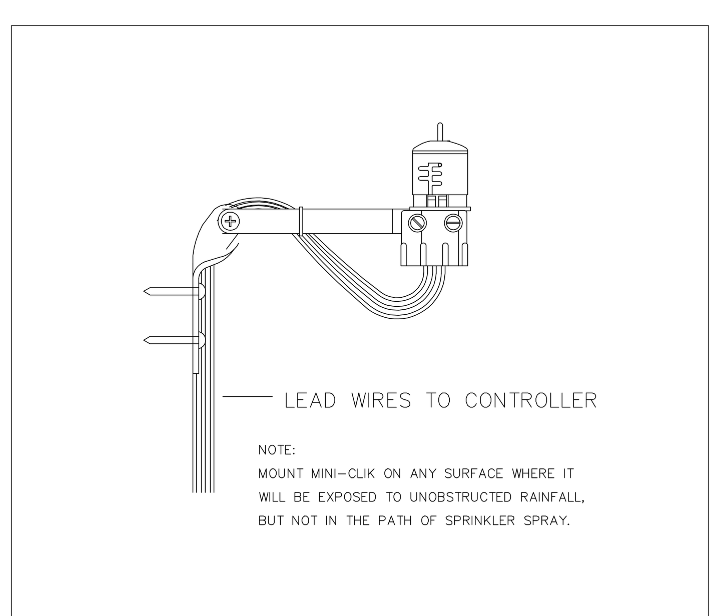

RAIN BIRD MINI-CLIK RAIN SENSOR

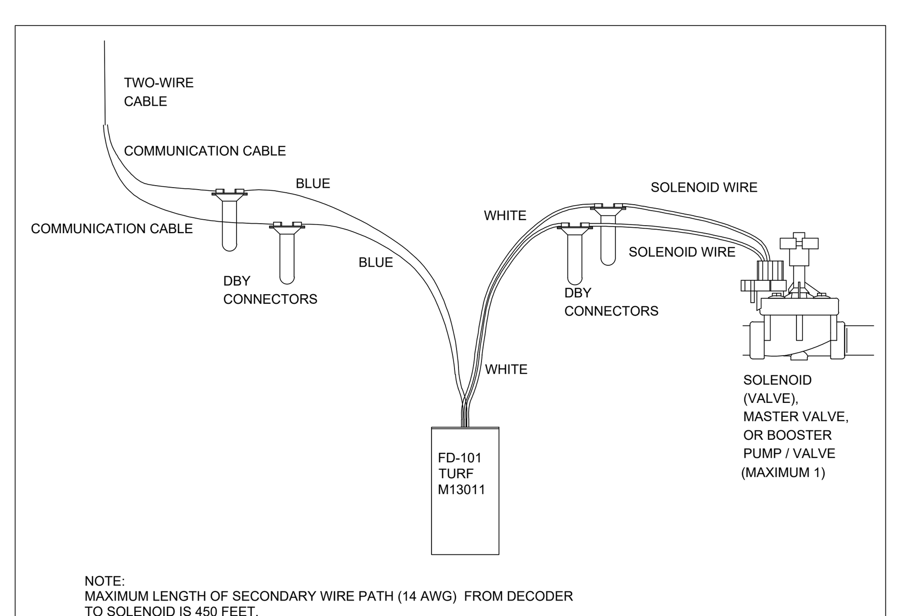

FD-101 TURF DECODER WIRING DIAGRAM

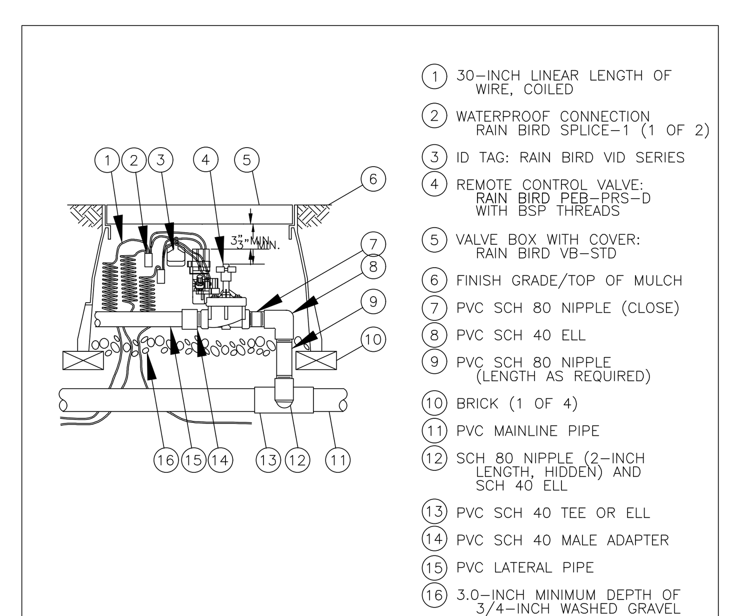

RAIN BIRD PEB VALVE

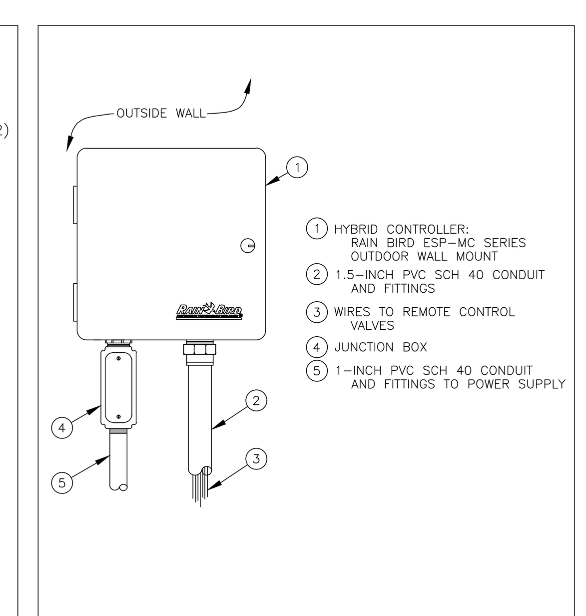

RAIN BIRD CONTROLLER DETAIL

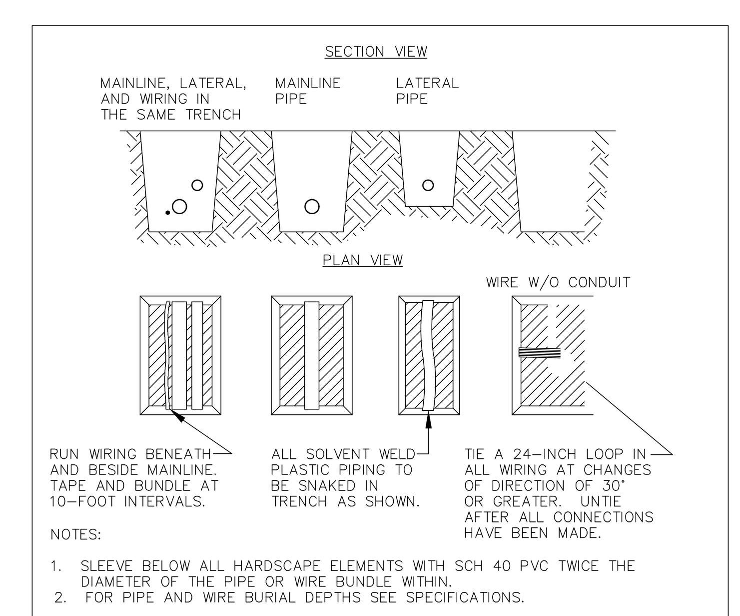

TRENCH DETAIL

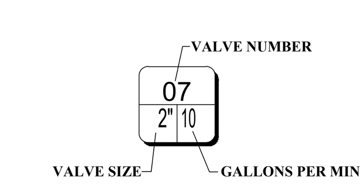

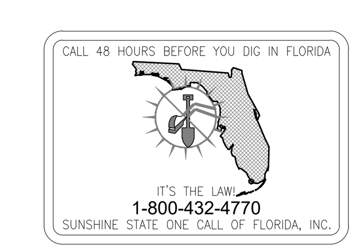

WITKIN HULTS + PARTNERS
307 south 21st avenue hollywood, florida
phone: 954.923.9681 facsimile: 954.923.9689
www.witkindesign.com

©2020 WITKIN HULTS + PARTNERS
THE DESIGN AND DRAWINGS HEREIN ARE THE INTELLECTUAL PROPERTY OF THIS LANDSCAPE ARCHITECT AND ARE PROTECTED UNDER THE COPYRIGHT PROTECTION ACT

Project:

FESTIVAL FLEA MARKET

POMPANO, FL

IRRIGATION DETAILS

Revisions:	Date:	By:
1) DRC Comments	01.02.2025	MAV
2) DRC Comments	02.10.2025	MAV
3) DRC Comments	03.25.2025	MAV

Seal:

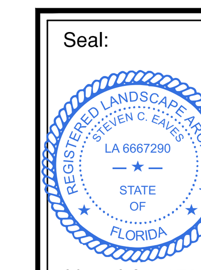

Digitally signed by Steven C Eaves
Date: 2025.04.01 12:38:34 -04'00'

Lic. # LA6667290
Member: A.S.L.A.

Drawing: Irrigation Details

Date: 11/25/2024

Scale: NTS

Drawn by: MAV

Sheet No.:

IR-6

Cad Id.: 2024-070

Z:\2024\Industrial\Foundry Festival Flea Market 2024-070\Irrigation\2025.03.31\Festive Flea Market IR.dwg Mar 31, 2025